YASKAWA

proficonn®

PROFIBUS DP Slave Modules with serial Interface

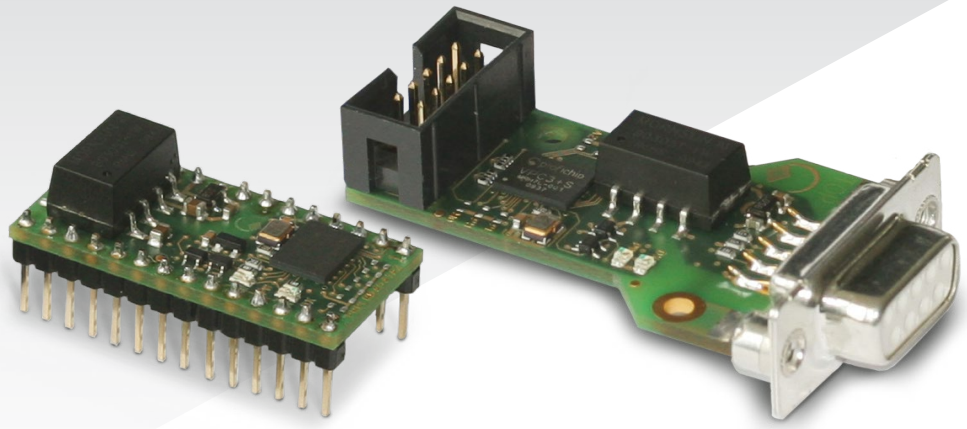

Features

- VPC3+S based
- SPI interface (up to 6 Mbit/s)
- Isolated RS485-interface up to 12 Mbit/s
- Status LEDs for power and DataExchange
- Vcc 3.3V
- Supporting PROFIBUS-DP-V0, DP-V1 and DP-V2
- 4 kByte communication RAM

proficonn-DSUB

- With 9-pin DSUB-connector for direct enclosure mounting
- Flat cable connector for SPI communication and power supply
- Dimensions: 58 x 31 x 16 mm

proficonn-DIP28

- 28 pin Dual-Inline-Package format
- PCB mounting via standard IC socket
- Dimensions: 36 x 18 x 10 mm

proficonn-DSUB and proficonn-DIP28 are very compact PROFIBUS-DP slave interface modules, based on profichip`s VPC3+S protocol ASIC. Both modules provide a complete PROFIBUS approved RS485 interface, including the DC/DC converter and the isolated line driver.
The customer application is connected efficiently over the SPI channel.
For further information please refer to the VPC3+S User Manual.

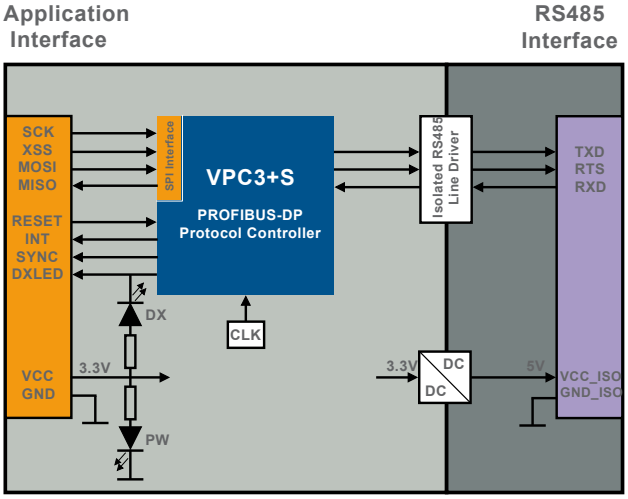

proficonn DIP28

The proficonn-DIP28 module has a standard DIP28 footprint. The module may be mounted either directly on the PCB or plugged into a standard IC socket.

proficonn DSUB

The proficonn-DSUB module is suited for direct enclosure mounting via shielded 9-pin DSUB female connector. The 10-pin 2.54 mm male socket provides a connection to the device electronic using a flat ribbon cable.

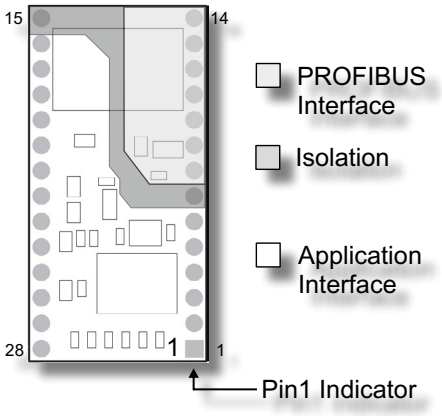

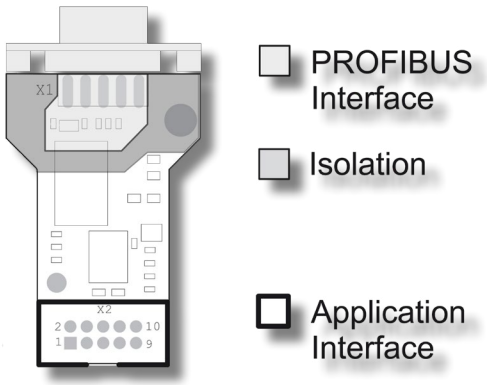

YASKAWA Europe GmbH
Ohmstr. 4
91074 Herzogenaurach
Germany

Phone: +1.678.880.6910
sales@profichipusa.com
www.profichipusa.com

profichip USA, Inc.
980 Birmingham Rd. #721
Alpharetta, GA 30004, USA

10/2020

YASKAWA

© YASKAWA Europe GmbH. All rights reserved. All trademarks are the property of their respective owners.